Round 3 - Friday, March 25, 2022

SHOTLINK

World Golf Championships-Dell Technologies Match Play

Austin Country Club

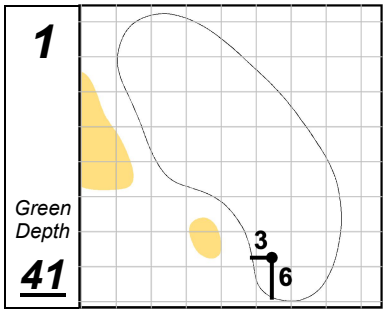

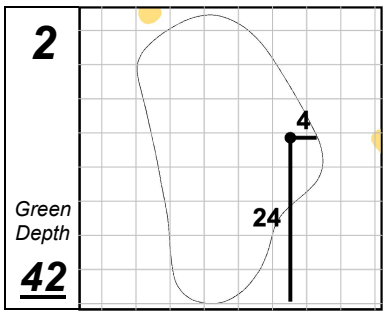

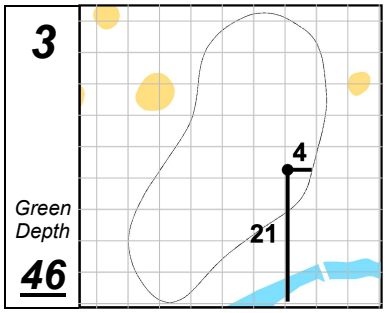

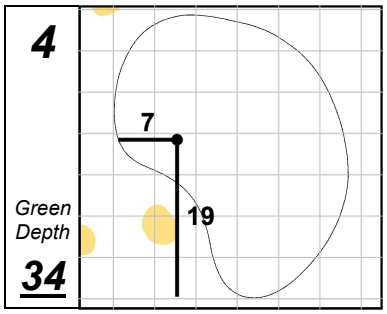

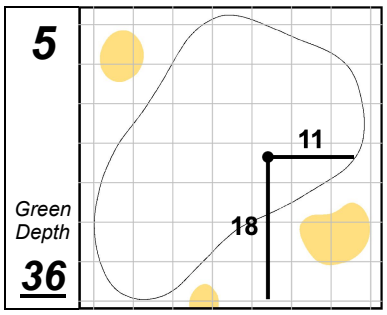

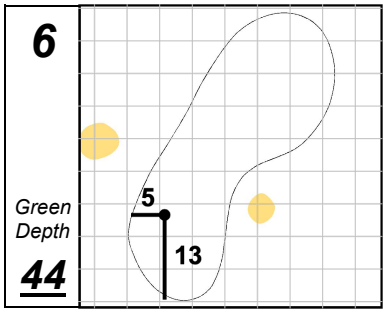

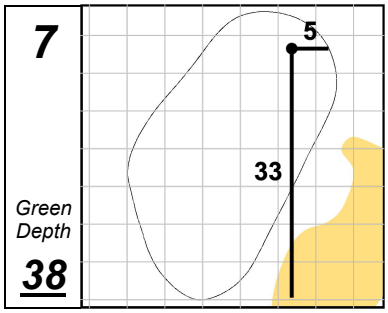

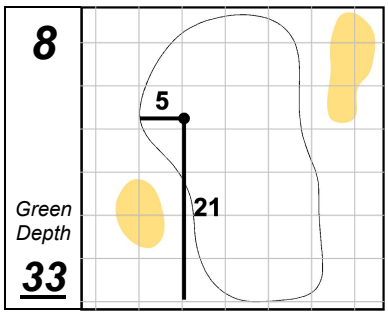

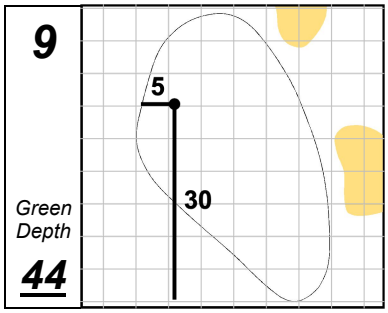

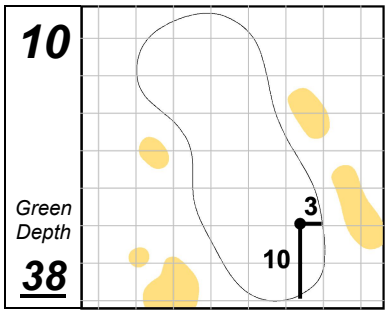

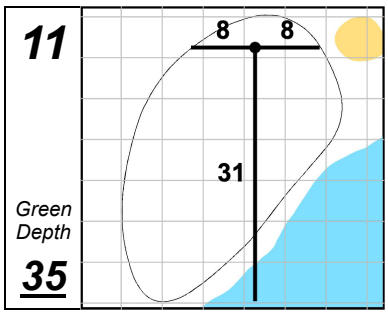

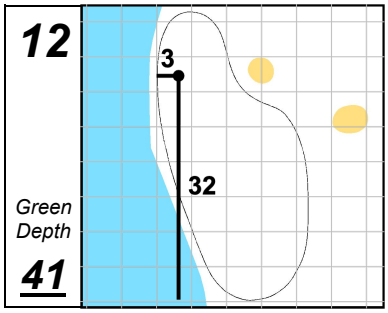

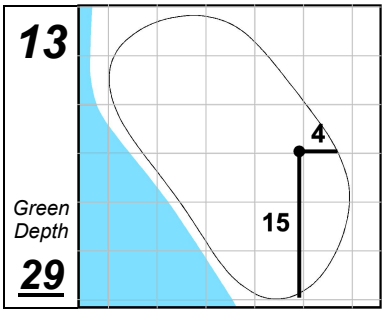

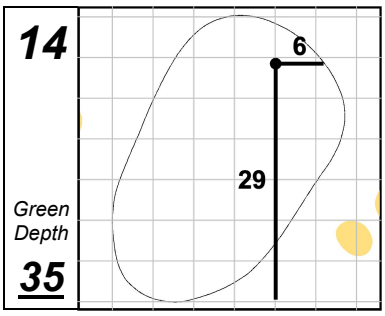

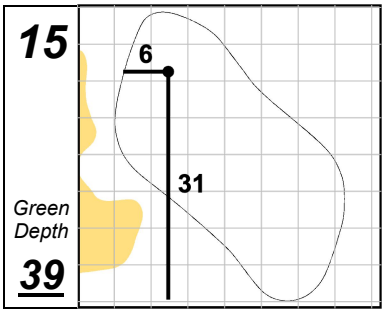

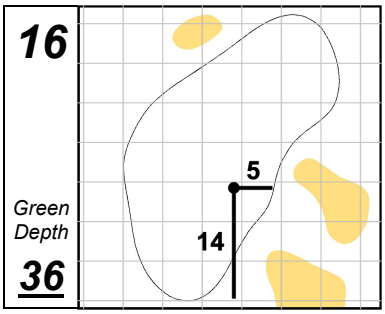

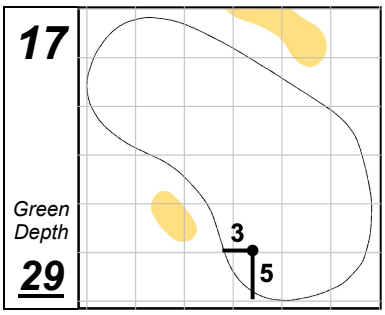

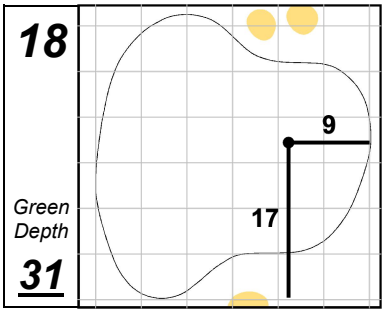

Each side of a complete square on the green represents 5 YARDS.

Thursday, March 24, 2022 12:04:18 PM